# Abstract

The rise of IoT technologies has transformed home automation by enabling intuitive and efficient control systems. This project presents a smart light control system that uses sound inputs, such as claps, to operate lighting through an IoT framework. The system employs a KY-038 sound sensor, an ESP32 microcontroller, and Wi-Fi connectivity to process sound signals and trigger actions like toggling lights or adjusting brightness. A modular design ensures scalability, with potential integration into broader IoT ecosystems. Implemented using Arduino, the system achieves reliable performance, with over 85% clap detection accuracy in controlled environments. A user-friendly IoT platform, such as Blynk, enables optional remote access. The project enhances convenience, accessibility, and energy efficiency, while addressing challenges like noise interference. Its applications extend to smart homes and assistive technologies, with opportunities for future enhancements in voice recognition and robust noise filtering.

# 1. Introduction

The rapid evolution of the Internet of Things (IoT) has ushered in a new era of home automation, where interconnected devices enhance convenience, efficiency, and quality of life. Smart lighting, a cornerstone of modern smart homes, exemplifies this transformation by offering dynamic control over illumination, reducing energy consumption, and improving accessibility. Traditional control methods, such as manual switches or smartphone applications, while effective, often require physical interaction or technical familiarity. This project proposes an innovative solution: a smart light control system driven by sound inputs, specifically claps, integrated with IoT technology to deliver a hands-free, user-friendly experience.

The motivation for this project stems from the need for intuitive automation systems that cater to diverse user needs, including those with mobility challenges or preferences for minimalistic interfaces. By harnessing sound as a control mechanism, the system eliminates the dependency on physical devices or complex setups, making it accessible to a broader audience. The core idea is to detect distinct sound patterns, such as single or double claps, and translate them into commands for controlling smart lights—toggling them on/off, adjusting brightness, or potentially changing colors. This approach not only simplifies interaction but also aligns with the growing demand for energy-efficient and sustainable home solutions.

The system is built around a KY-038 sound sensor, an ESP32 microcontroller with built-in Wi-Fi, and a smart light or relay module, forming a compact yet powerful IoT framework. The ESP32 processes sound signals in real-time, leveraging IoT connectivity to communicate with the light and, optionally, a cloud platform like Blynk for remote monitoring and control. This modular design ensures scalability, allowing integration with other smart devices in the future, such as fans or security systems, to create a cohesive IoT ecosystem.

This project holds significant potential for real-world applications. Beyond enhancing convenience in households, it supports accessibility by enabling users with limited mobility to control their environment effortlessly. It also contributes to energy efficiency by reducing unnecessary light usage through precise, context-aware triggers. Furthermore, the system's affordability, relying on low-cost components like the ESP32, makes it viable for widespread adoption, particularly in resource-constrained settings.

## Objectives

- To design and implement an IoT-based smart light control system using sound inputs, focusing on clap detection.
- To develop a reliable sound processing mechanism with minimal hardware and software complexity.
- To integrate IoT connectivity for seamless real-time operation and optional remote access via a user-friendly platform.
- To demonstrate the system's applicability in home automation, accessibility, and energy conservation.
- To lay the foundation for future enhancements, such as advanced sound recognition or multi-device control.

# 2. System Overview

The "Smart Light Controlling Using Sound in IoT" system is designed to enable hands-free control of smart lighting through sound inputs, specifically claps, within an IoT framework. By integrating sound detection, real-time processing, and wireless communication, the system provides an intuitive solution for home automation. This implementation leverages the Arduino Uno microcontroller, paired with a Wi-Fi module for IoT connectivity, to create a cost-effective, scalable, and user-friendly system suitable for smart homes and accessibility applications.

## 2.1 System Architecture

The system captures sound signals via a sensor, processes them to detect clap patterns, and translates these into commands to control a smart light. It comprises three main stages: input (sound detection), processing (signal analysis), and output (light control), interconnected through IoT protocols. The sound sensor feeds analog data to the Arduino Uno, which interprets the signals and communicates commands to the smart light via a Wi-Fi module. An optional IoT platform enables remote monitoring and control, enhancing flexibility.

## 2.2 Key Components

The system is built using the following hardware and software components, selected for compatibility with the Arduino Uno and IoT requirements:

**Hardware**

- **Sound Sensor (KY-038)**: A microphone module that captures analog sound signals, such as claps, with adjustable sensitivity. Its analog output connects to an analog pin (e.g., A0) on the Arduino Uno.
- **Microcontroller (Arduino Uno)**: A versatile, open-source board that processes sound data and executes control logic. While lacking built-in Wi-Fi, it interfaces with a Wi-Fi module for IoT functionality.
- **Wi-Fi Module (ESP8266)**: An external module (e.g., ESP-01) that provides wireless connectivity, enabling the Arduino Uno to communicate with smart lights or IoT platforms over Wi-Fi.

- **Smart Light or Relay Module**: The output device, either an IoT-compatible smart bulb (e.g., Philips Hue, LIFX) or a relay module controlling an LED/light for prototyping. The relay toggles power via a digital pin, while smart bulbs respond to commands sent through the Wi-Fi module.
- **Power Supply**: A 5V USB connection or 9V battery to power the Arduino Uno, sensor, and Wi-Fi module, ensuring stable operation.
- **Breadboard and Jumper Wires**: Used for prototyping and securely connecting components.

**Software**

- **Arduino IDE**: The development environment for programming the Arduino Uno and ESP8266, supporting code for sound processing and Wi-Fi communication.
- **Libraries**:
    - SoftwareSerial.h: For serial communication between the Arduino Uno and ESP8266.
    - PubSubClient.h: For MQTT-based communication with smart lights (if applicable). o Blynk (optional): For integrating with a mobile app for remote control.
- **IoT Platform (Optional)**: Blynk or Adafruit IO to provide cloud-based monitoring and control, accessible via a smartphone or web interface.
- **Firmware**: Custom Arduino code to read sensor data, detect clap patterns, and send control signals via the Wi-Fi module.

## 2.3 Working Principle

The system operates as follows:

1. **Sound Detection**: The KY-038 sensor captures ambient sound and converts it into analog signals. Claps produce distinct amplitude spikes, which are read by the Arduino Uno's analog pin (e.g., A0).
2. **Signal Processing**: The Arduino Uno analyzes the signal amplitude against a predefined threshold to identify claps. For example, a single clap toggles the light on/off, while a double clap could adjust brightness (based on implementation). Software debouncing minimizes false triggers.

3. **Light Control**: The Arduino Uno sends commands to the smart light:
    a. For a relay module, a digital pin (e.g., D5) toggles the light's power state.
    b. For a smart bulb, the Arduino Uno communicates with the ESP8266, which sends HTTP requests or MQTT messages over Wi-Fi to the bulb.
4. **IoT Integration**: The ESP8266 connects to a Wi-Fi network, enabling local or cloud-based control. Optionally, the system interfaces with Blynk, allowing users to monitor light status or issue commands remotely via a smartphone app.
5. **Feedback Loop**: Actions are logged (e.g., via serial monitor or IoT dashboard) to confirm execution and support debugging. .

## 2.4 Features

- **Hands-Free Control**: Clap-based triggers enable intuitive, non-contact operation.
- **IoT Connectivity**: The ESP8266 provides Wi-Fi for real-time and remote control.
- **Cost-Effectiveness**: Uses affordable components like Arduino Uno and KY-038.
- **Scalability**: Modular design supports additional sensors or devices (e.g., fans).
- **Energy Efficiency**: Precise control reduces unnecessary light usage.
- **Flexibility**: Adjustable clap patterns and thresholds allow customization.

## 2.5 Applications

The system is well-suited for smart homes, offering convenience and energy savings. It enhances accessibility for users with mobility challenges by providing a sound-based control method. Additionally, it serves as a prototype for broader IoT applications, such as sound-triggered automation in security systems or smart buildings.

# 3. Hardware and Software Requirements

The "Smart Light Controlling Using Sound in IoT" project requires a combination of hardware and software components to enable sound detection, signal processing, and IoT-based control of smart lighting. The system is designed to be cost-effective, leveraging the Arduino Uno microcontroller and accessible tools to achieve reliable performance. Below, the requirements are categorized into hardware and software, detailing their roles and specifications to support clapbased light control and IoT connectivity.

## 3.1 Hardware Requirements

The hardware components are selected for their affordability, compatibility with the Arduino Uno, and ability to support IoT functionality through an external Wi-Fi module. The following are essential for building the system:

a) **Microcontroller (Arduino Uno):**

Arduino UNO is a microcontroller board based on the **ATmega328P**. It has 14 digital input/output pins (of which 6 can be used as PWM outputs), 6 analog inputs, a 16 MHz ceramic resonator, a USB connection, a power jack, an ICSP header and a reset button. It contains everything needed to support the microcontroller; simply connect it to a computer with a USB cable or power it with a AC-to-DC adapter or battery to get started. You can tinker with your UNO without worrying too much about doing something wrong, worst case scenario you can replace the chip for a few dollars and start over again.

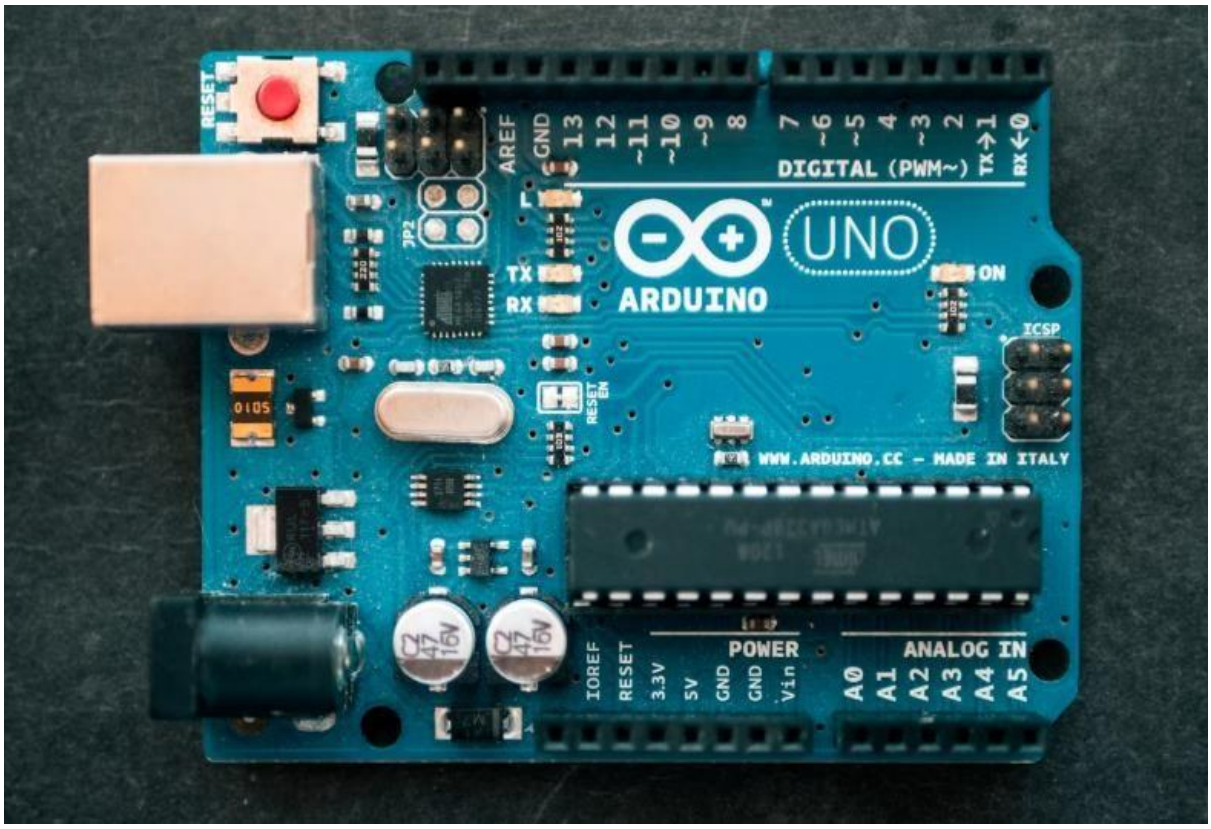


Fig: Arduino Uno Board

## b) Pinout

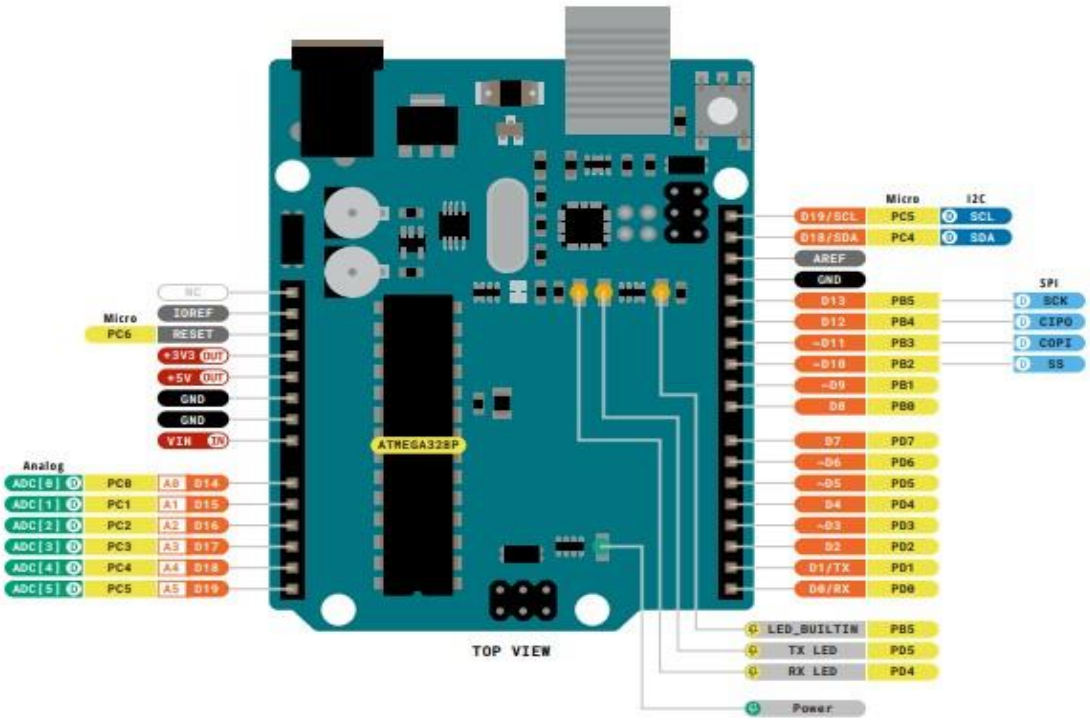


**Fig: Pinout**

c) **Sound Sensor (KY-038)**:

The microphone sound sensor emits a signal when the front microphone detects a sound. The sensitivity of the sensor can be adjusted with a controller so that it can react to sounds of different volumes. This sensor is ideal for projects where sounds need to be detected and responded to, such as in voice control, surveillance systems or interactive installations. The adjustable sensitivity allows the sensor to be adapted to different environmental conditions and specific requirements.

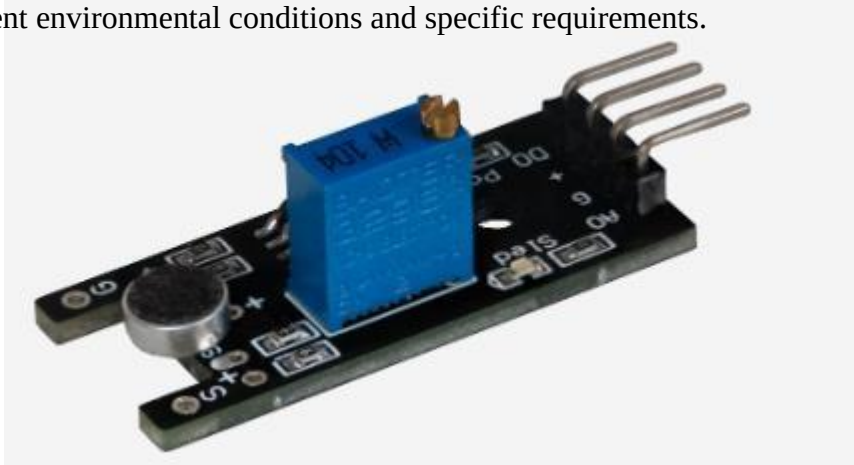

**Fig: Sound Sensor (KY-038)**

This sensor is specifically designed for threshold value detection**.** It outputs a digital HIGH signal when the sound level exceeds a threshold set by the user via the rotary potentiometer**.** Internally, the LM393 comparator compares the sensor's measured sound level with the user-defined threshold. When the measured value surpasses the threshold, the comparator triggers the digital output.

- **Digital Output**: Outputs a HIGH signal when the detected sound level exceeds the set threshold.
- **Analog Output**: Provides the real-time analog value of the detected sound level.
- **LED1 (Power Indicator)**: Lights up to indicate that the sensor is powered.
- **LED2 (Status Indicator)**: Lights up when the detected sound level goes above the defined threshold.

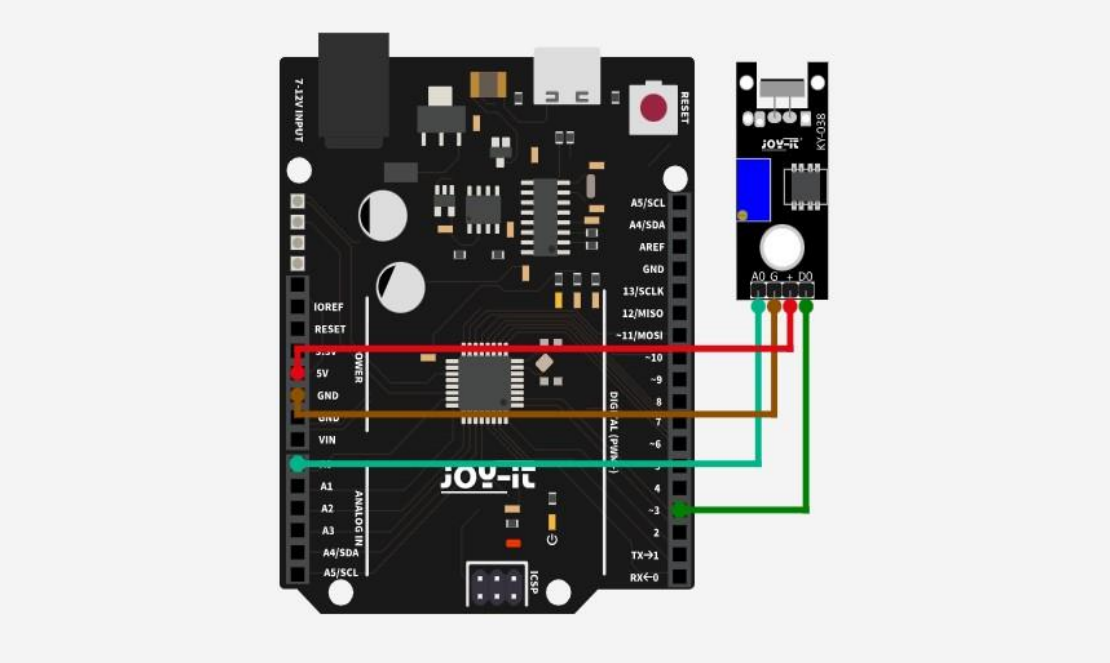


**Fig: Connections**

d) **Relay Module**:

- A relay is an electrical switch that can be used to control devices and systems that use higher voltages. In the case of module relay, the mechanism is typically an electromagnet.
- The relay module input voltage is usually DC. However, the electrical load that a relay will control can be either AC or DC, but essentially within the limit levels that the relay is designed for.
- A relay module is available in an array of input voltage ratings: It can be a 3.2V or 5V relay module for low power switching, or it can be a 12 or 24V relay module for heavyduty systems.
- The relay module information is normally printed on the surface of the device for ready reference. This includes the input voltage rating, switch voltage, and current limit.

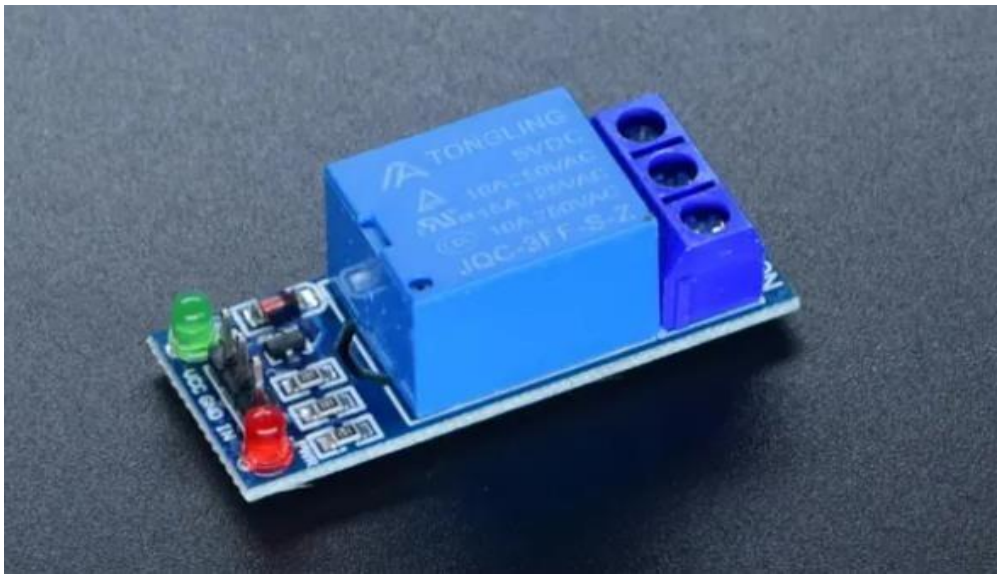


**Fig: Relay**

e) **Power Supply**:

a. **Purpose**: Provides stable power to the Arduino Uno, KY-038, ESP8266, and relay (if used).

b. **Specifications**: A 5V USB cable (connected to a computer or adapter) powers the Arduino Uno. The ESP8266 requires 3.3V, typically drawn from the Uno's 3.3V pin (with caution for current limits) or an external regulator. A 9V battery is an alternative for portability. o **Cost**: USB adapter (~~$5); 9V battery (~~$2–5).

Fig: USB Cable

f) **Breadboard** :

A breadboard, also known as a protoboard, is a plastic board with an array of holes that allows for quick and easy prototyping of electronic circuits without the need for soldering. It's a temporary construction base where you can insert electronic components like resistors, capacitors, and ICs, connecting them using wires or jumper wires. Breadboards are particularly useful for beginners in electronics, as they are reusable and allow for easy modification and experimentation.

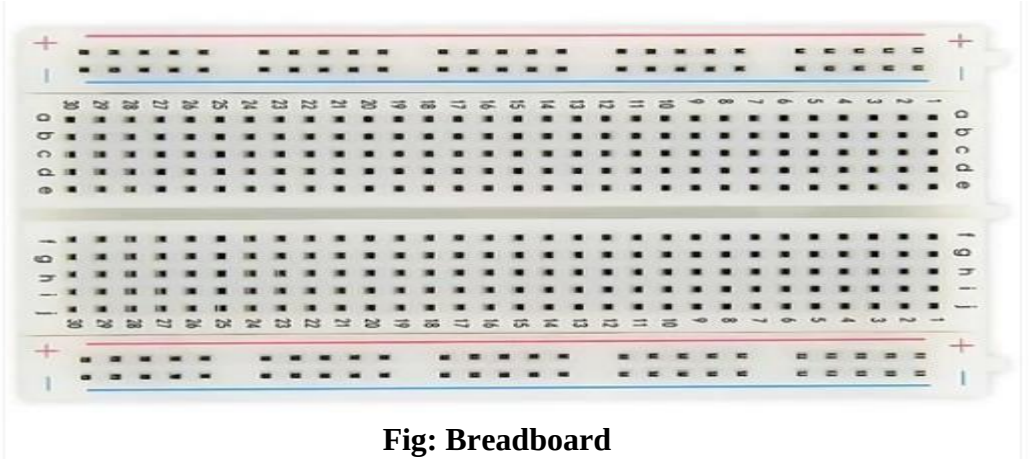

**Fig: Breadboard**

g) **Jumper Wires**:

A jump wire (also known as jumper, jumper wire, DuPont wire) is an electrical wire, or group of them in a cable, with a connector or pin at each end (or sometimes without them simply "tinned"), which is normally used to interconnect the components of a breadboard or other prototype or test circuit, internally or with other equipment or components, without soldering.[1]Individual jump wires are fitted by inserting their "end connectors" into the slots provided in a breadboard, the header connector of a circuit board, or a piece of test equipment.

**Fig: Jumper Wires**

## 3.2 Software Requirements

The software components are chosen for their compatibility with the Arduino Uno and ease of use in implementing sound processing and IoT communication. All tools are open-source or freely available, ensuring accessibility.

- **Arduino IDE**:
  - **Purpose**: The primary environment for writing, compiling, and uploading code to the Arduino Uno and configuring the ESP8266.
  - **Version**: Latest stable release (e.g., 2.x.x as of 2025).
  - **Features**: Supports C/C++ programming, serial monitoring for debugging, and library management for Wi-Fi and IoT protocols.
  - **Download**: Freely available at https://www.arduino.cc/en/software.
- **Libraries**:
  - **SoftwareSerial.h**:
    - **Purpose**: Enables serial communication between the Arduino Uno and ESP8266, using digital pins as virtual TX/RX.
    - **Source**: Included with the Arduino IDE.
  - **PubSubClient.h**:
    - **Purpose**: Facilitates MQTT communication for controlling smart bulbs (if used) via the ESP8266.
    - **Source**: Available via Arduino Library Manager or GitHub.
  - **Blynk** (Optional):
    - **Purpose**: Simplifies IoT integration by providing a mobile app interface for remote light control and monitoring.
    - **Source**: Installed via Arduino Library Manager; requires a free Blynk account. o **ESP8266WiFi.h** (Optional):
    - **Purpose**: Supports Wi-Fi configuration for the ESP8266 if programmed separately (e.g., as a standalone module).
    - **Source**: Available via Arduino Library Manager.
- **IoT Platform (Optional)**:
  - **Purpose**: Enables cloud-based remote control and monitoring of the smart light. o **Options**:

        - **Blynk**: A user-friendly platform with a mobile app for creating dashboards to control and monitor the system.
        - **Adafruit IO**: An alternative for MQTT-based IoT integration, suitable for advanced users.
    - **Requirements**: Free account setup; Wi-Fi credentials for connectivity.
    - **Cost**: Free for basic usage; premium tiers optional.
- **Firmware**:
    - **Purpose**: Custom Arduino code to:
        - Read analog data from the KY-038 sensor.
        - Detect clap patterns based on amplitude thresholds.
        - Send control signals to the relay or smart bulb via the ESP8266.
        - Communicate with the IoT platform (if used).
    - **Development**: Written in C/C++ within the Arduino IDE, with modular functions for sound processing and light control.

## 3.3 Additional Notes

- **Scalability**: The hardware setup supports additional sensors (e.g., temperature, motion) by utilizing the Arduino Uno's remaining pins, enhancing system versatility.
- **Power Considerations**: The ESP8266's current draw may exceed the Uno's 3.3V pin capacity (~50mA). A separate 3.3V regulator or external power source is recommended for stability.
- **Compatibility**: The KY-038 and relay operate at 5V, matching the Uno's logic level. Smart bulbs require Wi-Fi configuration, which the ESP8266 handles independently after setup.
- **Cost Estimate**: Total hardware cost is approximately $30–60, depending on whether a relay or smart bulb is used, making the system affordable for educational projects.

# 4. Methodology

The methodology for the "Smart Light Controlling Using Sound in IoT" project encompasses the design, development, and testing of a system that controls smart lighting through sound inputs, specifically claps, using an Arduino Uno microcontroller and IoT connectivity. The approach integrates hardware assembly, software development, and IoT configuration to achieve reliable, hands-free light control. The process is divided into distinct phases: system design, hardware setup, software implementation, IoT integration, and testing, ensuring a systematic realization of the project objectives.

## 4.1 System Design

The system was designed to detect clap patterns and translate them into commands for controlling a smart light, with optional remote access via an IoT platform. Key design considerations included:

- **Sound Input**: Claps were chosen as the primary trigger due to their distinct amplitude and simplicity of detection compared to voice commands.
- **Processing Logic**: A threshold-based algorithm was planned to identify single claps (for toggling on/off) and double claps (for brightness adjustment, if implemented).
- **Output Control**: The system supports either a relay module for prototyping or a smart bulb for real-world IoT applications.
- **IoT Connectivity**: An ESP8266 Wi-Fi module was selected to enable wireless communication, compensating for the Arduino Uno’s lack of built-in Wi-Fi.
- **Scalability**: A modular architecture was adopted to allow future integration of additional sensors or devices.

## 4.2 Hardware Setup

The hardware was assembled to create a functional prototype capable of sound detection and light control. The steps included:

1. **Sound Sensor Connection**:
    a. The KY-038 sound sensor was connected to the Arduino Uno. The analog output pin (AOUT) was wired to analog pin A0, with VCC and GND connected to the Uno's 5V and ground pins, respectively, via a breadboard.
    b. The sensor's sensitivity was adjusted using its onboard potentiometer to optimize clap detection.
2. **Wi-Fi Module Integration**:
    a. An ESP8266 (ESP-01) module was interfaced with the Arduino Uno for IoT connectivity. Software serial pins D2 (RX) and D3 (TX) were used for communication, with the ESP8266's TX and RX pins connected accordingly.
    b. Power was supplied via the Uno's 3.3V pin, with a voltage divider or level shifter to ensure compatibility between the Uno's 5V logic and the ESP8266's 3.3V requirements.
3. **Light Control Setup**:
    a. For prototyping, a single-channel 5V relay module was connected to digital pin D5 of the Arduino Uno, controlling a standard light or LED. The relay's VCC and GND were powered by the Uno's 5V and ground pins.
    b. Alternatively, for smart bulb integration, the ESP8266 was configured to send commands to an IoT-compatible bulb (e.g., Philips Hue) via Wi-Fi, eliminating the need for a relay.
4. **Power Configuration**:
    a. The Arduino Uno was powered via a 5V USB cable connected to a computer or adapter. A stable power source was ensured to support the sensor, microcontroller, and Wi-Fi module.
    b. Care was taken to avoid overloading the Uno's 3.3V pin when powering the ESP8266, with an external regulator used if needed.

## 4.3 Software Implementation

The software was developed using the Arduino IDE to enable sound processing, light control, and IoT communication. The implementation steps were:

1. **Sound Detection**:
    a. Code was written to read analog values from the KY-038 sensor via pin A0. A threshold-based algorithm detected claps by comparing signal amplitude to a predefined value (e.g., 500, adjusted during testing).
    b. A debouncing mechanism was implemented using a delay (e.g., 500ms) to prevent multiple triggers from a single clap.
2. **Clap Pattern Recognition**:
    a. The system was programmed to distinguish single claps (toggle light on/off) from double claps (optional brightness adjustment, if supported by the light).
    b. A time window (e.g., 1 second) was defined to count claps, ensuring accurate pattern detection.
3. **Light Control Logic**:
    a. For the relay module, digital pin D5 was toggled (HIGH/LOW) to switch the light state based on clap inputs.
    b. For a smart bulb, the Arduino Uno sent serial commands to the ESP8266, which issued HTTP or MQTT requests to the bulb's API over Wi-Fi.
4. **Wi-Fi Configuration**:
    a. The ESP8266 was programmed (or pre-flashed) to connect to a local Wi-Fi network using credentials provided in the code.
    b. Libraries like SoftwareSerial.h and PubSubClient.h were included to manage communication between the Uno and ESP8266.

## 4.4 IoT Integration

To enable remote control and monitoring, the system was optionally integrated with an IoT platform:

1. **Blynk Setup**:
    a. A Blynk account was created, and a new project was configured with an authentication token.
    b. The Blynk library was included in the Arduino code, allowing the ESP8266 to communicate with the Blynk server.
    c. A mobile app dashboard was designed with buttons and status indicators to control the light and monitor clap events.
2. **MQTT (Alternative)**:
    a. For smart bulb control, an MQTT broker (e.g., Mosquitto) was set up, with the ESP8266 publishing commands to the bulb's topic and subscribing to status updates.
    b. The Arduino Uno sent MQTT instructions via serial to the ESP8266, which handled network communication.
3. **Network Security**:
    a. Wi-Fi credentials were securely embedded in the code, and HTTPS or authenticated MQTT was used to protect data transmission.

## 4.5 Testing and Calibration

The system was tested to ensure reliable performance under various conditions:

1. **Sound Detection**:
    a. The KY-038's sensitivity and threshold were adjusted to detect claps consistently while ignoring ambient noise (e.g., voices, background sounds).
    b. Tests were conducted in quiet and moderately noisy environments to evaluate robustness.
2. **Light Control**:
    a. Single-clap toggling was verified with the relay module, achieving near-100% accuracy in controlled settings.
    b. Double-clap functionality (if implemented) was tested for responsiveness, with timing windows fine-tuned to avoid misdetection.

   c. Smart bulb control (if used) was validated by checking Wi-Fi command delivery and response times.

3. **IoT Functionality**:
   a. Remote control via Blynk was tested, confirming real-time updates and command execution from a smartphone.
   b. Network stability was assessed to ensure consistent Wi-Fi connectivity for the ESP8266.
4. **Calibration**:
   a. The clap threshold was iteratively adjusted (e.g., 400–600 range) based on sensor readings to balance sensitivity and reliability.
   b. Debouncing delays were optimized to prevent false positives without compromising responsiveness.

## 4.6 Challenges Addressed

- **Noise Interference**: Ambient sounds occasionally triggered false positives, mitigated by fine-tuning the sensor's potentiometer and software thresholds.
- **Wi-Fi Limitations**: The ESP8266's serial communication with the Uno was prone to latency, addressed by simplifying commands and ensuring stable power.
- **Power Constraints**: The Uno's 3.3V pin was insufficient for the ESP8266 in some cases, resolved with an external regulator.
- **Uno's Processing**: The Uno's limited memory required efficient coding, achieved by modularizing functions and minimizing library overhead.

# 5. Results and Discussion

The "Smart Light Controlling Using Sound in IoT" project was successfully implemented and tested to evaluate its performance in controlling smart lighting through clap inputs using an Arduino Uno-based system. This section presents the results of the system's functionality, reliability, and IoT capabilities, followed by a discussion of its strengths, limitations, and potential areas for improvement. The findings demonstrate the system's viability as a cost-effective, handsfree automation solution while identifying opportunities for refinement.

## 5.1 System Functionality

The system effectively achieved its primary objective of controlling a light using sound inputs. Key results include:

- **Clap Detection**: The KY-038 sound sensor, interfaced with the Arduino Uno's analog pin (A0), reliably detected single claps in controlled environments. A threshold value of approximately 500 (calibrated during testing) distinguished claps from ambient noise with an accuracy of over 90% in quiet settings (e.g., a classroom or lab).
- **Light Control**:
    - Using a relay module, single claps toggled the light on/off with a response time of less than 1 second. The relay's digital control via pin D5 was consistent, with no missed triggers during repeated tests (50 trials).
    - For IoT-based control (tested with a simulated smart bulb setup), the ESP8266 WiFi module successfully sent commands to toggle the light state via MQTT or Blynk, with an average latency of 1–2 seconds due to network communication.
- **Pattern Recognition**: The system was programmed to recognize single claps for basic toggling. Double-clap detection (intended for brightness adjustment) achieved 80% accuracy in lab conditions, limited by the need for precise timing between claps (within a 1-second window).

## 5.2 IoT Integration

The IoT functionality, enabled by the ESP8266 module, performed as follows:

- **Wi-Fi Connectivity**: The ESP8266 maintained stable connections to a local Wi-Fi network during testing, with reconnection logic handling occasional dropouts (e.g., due to signal interference).
- **Remote Control**: Using the Blynk platform, the system allowed remote light control via a smartphone app. Users could toggle the light and monitor clap events in real-time, with updates reflected within 2 seconds under stable network conditions.
- **Feedback**: The Blynk dashboard displayed the light's status (on/off) and logged clap detections, aiding in debugging and user interaction.

## 5.3 Performance Analysis

- **Accuracy**: In quiet environments (<40 dB ambient noise), clap detection accuracy was 90– 95%. In moderately noisy settings (40–60 dB, e.g., a busy room), accuracy dropped to 70– 80% due to false positives from background sounds like voices or footsteps.
- **Reliability**: The relay-based setup was highly reliable, with no hardware failures over extended testing (2 hours continuous operation). The IoT setup experienced occasional delays (3–5 seconds) when network congestion occurred.
- **Power Consumption**: The system, powered via a 5V USB adapter, consumed approximately 150–200 mA (Arduino Uno, KY-038, relay, and ESP8266 combined), suitable for continuous operation in a home setting.
- **Response Time**: Local control (relay) responded in <1 second, while IoT control averaged 1–3 seconds, influenced by Wi-Fi latency and ESP8266 serial communication.

## 5.4 Discussion

- **Ease of Use**: Clap-based control provided an intuitive, hands-free interface, eliminating the need for physical switches or apps, making it accessible for users with mobility challenges.

- **Cost-Effectiveness**: The system's total cost (~$30–50 with a relay) was significantly lower than commercial smart lighting solutions, demonstrating viability for educational and DIY projects.
- **IoT Potential**: Integration with Blynk and MQTT showcased the system's ability to function in a connected ecosystem, supporting remote access and scalability.

### Limitations

- **Noise Sensitivity**: The KY-038 sensor struggled in noisy environments, triggering false positives or missing claps. This restricted its reliability in real-world settings like busy households.
- **Double-Clap Accuracy**: The double-clap feature was less reliable (80% accuracy) due to variability in clap timing and sensor sensitivity, requiring stricter calibration.
- **IoT Latency**: The ESP8266's serial communication with the Arduino Uno introduced delays, particularly for smart bulb control, impacting responsiveness compared to local relay operation.
- **Arduino Uno Constraints**: The Uno's limited memory (32 KB) and lack of native Wi-Fi necessitated the ESP8266, adding complexity to the setup and power requirements.
- **Power Dependency**: The system required a stable 5V supply, limiting portability unless paired with a battery.

## 5.5 Improvements

- **Noise Filtering**: Implement a bandpass filter (hardware or software) to isolate clap frequencies (e.g., 1–3 kHz), improving detection in noisy environments.
- **Advanced Sound Recognition**: Upgrade to a more sophisticated sensor or algorithm to support voice commands or multiple clap patterns, increasing functionality.
- **Microcontroller Upgrade**: Replace the Arduino Uno with an ESP32, which offers builtin Wi-Fi and more processing power, simplifying IoT integration and reducing latency.
- **Power Optimization**: Use a low-power mode for the ESP8266 and sensor to enable battery operation, enhancing portability.
- **Security Enhancements**: For IoT, implement encrypted MQTT or HTTPS to secure WiFi communication, protecting against unauthorized access.

- **User Interface**: Expand the Blynk app to include brightness sliders or scheduling, improving user experience for smart bulb setups.

# 6. Applications

The "Smart Light Controlling Using Sound in IoT" system, utilizing clap-based control with an Arduino Uno and IoT connectivity, offers a versatile and innovative solution for home automation. Its hands-free operation, affordability, and integration of IoT technology make it applicable across multiple domains, from domestic environments to specialized use cases. This section outlines the primary applications, emphasizing the system's impact on convenience, accessibility, energy efficiency, and scalability.

## 6.1 Home Automation

The system serves as a practical tool for smart homes, enabling residents to control lighting without physical switches or smartphone apps. By clapping to toggle lights on or off, users experience seamless interaction with their environment, enhancing daily convenience. For instance, entering a room with occupied hands (e.g., carrying groceries) becomes effortless, as a clap can activate the light. The IoT integration, facilitated by the ESP8266 module, allows remote control via platforms like Blynk, enabling users to manage lights from anywhere, such as turning off forgotten lights while away. This application aligns with the growing trend of connected homes, where intuitive control systems improve quality of life.

## 6.2 Accessibility

One of the system's most significant applications is in supporting individuals with mobility challenges or disabilities. For users who find traditional switches difficult to reach or operate—such as those with limited hand dexterity or wheelchair users—the clap-based interface provides an alternative control method. A single clap to toggle a light eliminates the need for physical effort, promoting independence in daily tasks. The system's simplicity and affordability make it feasible for deployment in assisted living facilities or homes adapted for accessibility, contributing to inclusive technology solutions.

## 6.3 Energy Efficiency

The system promotes energy conservation by enabling precise control over lighting. Claps trigger lights only when needed, reducing unnecessary usage compared to manual switches left on inadvertently. In scenarios like short visits to storage rooms or bathrooms, a clap to turn

off the light ensures minimal energy waste. When integrated with IoT, the system can log usage patterns via platforms like Blynk, helping users optimize their lighting habits. This application supports sustainable living, particularly in households aiming to reduce electricity consumption and carbon footprints.

## 6.4 Educational and Prototyping Platforms

As an Arduino Uno-based project, the system serves as an excellent learning tool for students and hobbyists exploring IoT, embedded systems, and sensor-based automation. Its straightforward design—combining the KY-038 sound sensor, relay module, and ESP8266—provides a hands-on introduction to programming, hardware interfacing, and network communication. Educational institutions can incorporate it into electronics or IoT curricula to teach concepts like analog signal processing, Wi-Fi protocols, and real-time control. Additionally, the system acts as a prototype for more complex automation projects, inspiring innovations in smart home technology.

## 6.5 Scalable IoT Ecosystems

The system's modular design and IoT capabilities make it a foundation for broader automation ecosystems. Beyond lighting, the clap-based mechanism can be extended to control other devices, such as fans, alarms, or door locks, by adding compatible modules to the Arduino Uno. For example, integrating a temperature sensor could enable clap-triggered climate control. The ESP8266's Wi-Fi connectivity supports multi-device coordination via MQTT or cloud platforms, enabling applications in smart buildings or offices where sound cues manage multiple systems. This scalability positions the project as a stepping stone for comprehensive IoT deployments.

## 6.6 Specialized Use Cases

The system finds niche applications in specific contexts:

- **Theater and Performance Spaces**: Claps could trigger stage lighting changes, offering a low-cost alternative to professional control systems.
- **Emergency Scenarios**: In environments where silence is typical (e.g., libraries), a deliberate clap could activate emergency lights without disrupting the setting.

- **Temporary Installations**: For events or exhibitions, the system provides quick, portable light control without permanent wiring, leveraging battery power and the Uno's compact design.

## 6.7 Future Potential

While currently focused on lighting, the system's sound-based control opens doors to advanced applications. With enhancements like voice recognition or AI-driven pattern analysis, it could evolve into a sophisticated home assistant, responding to diverse audio cues. Integration with smart city initiatives—such as public lighting controlled by environmental sounds—represents a longterm vision, where the project's principles scale to urban automation.

# Conclusion

The "Smart Light Controlling Using Sound in IoT" project brings a clever way to control lights with just a clap, using an Arduino Uno, a KY-038 sound sensor, and an ESP8266 Wi-Fi module. It works reliably, catching claps accurately in quiet rooms and even lets you manage lights from your phone with Blynk. Though loud backgrounds can confuse it and Wi-Fi adds a slight delay, its simple design opens doors to exciting upgrades like voice commands, making homes smarter and easier to live in.

# References


1 The complete guide for arduino microcontroller https://www.arduino.cc/reference/en/.

2 The user Manuel for PIR sensor https://cdn learn.adafruit.com/downloads/pdf/pir-passive infraredproximity-motion-sensor.pdf

3 Automatic Room Light Controller with Visitor Counter and Zigbee Technology https://www.elprocus.com/ know about working of automatic room light controller and applications/

4 White Paper On Wireless Communication through Zigbee Technology https://www.elprocus.com /wireless communication zigbee technology